AIRCRAFT MAINTENANCE SOLUTIONS

PROVIDING AIRCRAFT MAINTENANCE SYSTEMS FOR OVER 20 YEARS

At Liftsafe Fall Protection Inc. our products are engineered for specific aircraft applications to provide safe access for hard to reach places. Working with our customers, we design, engineer, and fabricate custom access stands and ground support equipment for our extensive international customer base. Through rigorous product testing, we have refined our products to perform when it counts.

OUR PROCESS

CONCEPT
Our process starts with your input. Based on your specifications we will develop initial concept drawings of your solution.

DEVELOPMENT
Includes the editing of the initial concept into a functional and buildable solution, where our expert staff will consider materials, dimensions, and building methods.

DESIGN
Our team will use CAD software to build your design in 2D and 3D. Any final edits will occur at this stage.

MANUFACTURE
Our engineering and fabrication teams will collaborate to bring your innovative solution to life.

TESTING
To ensure quality control, we exhaustively test the functionality of the piece of equipment and work out any kinks in the design as necessary.

SERVICE / SUPPORT
We provide industry leading service and support, including technical expertise, engineering and design capabilities, manufacturing excellence, and post delivery support.

CONTENTS

4 ABOUT US

6 CUSTOM SOLUTIONS

8 ENGINE ACCESS STANDS
DF071554-06
DF071554-07-08
DF071554-07-10
DF071554-07-12
DF071563-01
DF071562-02
DF071564-01

20 LANDING GEAR ACCESS STANDS
DF071592-04
DF071592-01

26 WHEEL WELL AND LOWER CARGO ACCESS STANDS
DF071556-03
DF071556-03XP

32 AIRCRAFT ENTRY AND CABIN INTERIOR STANDS
DF101580-02
DF101579-01
DF071553-01

40 MATERIAL HANDLING AND FALL SAFETY
DF071560-01
DF081002
ELECTRIC TUGGERS
GUARDRAIL SYSTEMS

50 WARRANTY

SCAN ME

ABOUT LIFTSAFE FALL PROTECTION

Liftsafe Fall Protection Inc., is a member of the Liftsafe Group of Companies, and we provide a number of different products and services throughout North America and around the world and are considered an industry leader in fall protection solutions.

We have an extensive line of aviation maintenance ladders and stands which are used to service the aviation, transportation and aerospace industries. Our wide range of standard and custom stands including Aviation Platform Stands, Engine Access Stands and Landing Gear Access Stands. Our products are used worldwide and are able to provide a safe working platform for regular maintenance, thus allowing for workers to conduct their jobs with peace of mind.

At Liftsafe Fall Protection, our focus is creating engineered solutions that ensure your employees are safe from falling accidents and falling objects. From design to implementation, we offer services that span the entire lifecycle of your project. This means you will have access to an in-house engineering team for your project design and approvals.

LIFTSAFE FALL PROTECTION IS PROUD TO DESIGN AND MANUFACTURE ALL OF OUR AVIATION SAFETY SOLUTIONS IN NORTH AMERICA.

NATO N/CAGE CODE: L03Y4

member of NBAA

OUR VALUES

We're committed to providing the highest level of safety solutions to our customers to ensure a stable and safe environment for all users and staff.

OUR PRODUCTS REPRESENT

- Strength
- Reliability
- Safety
- Durability
- Compliance

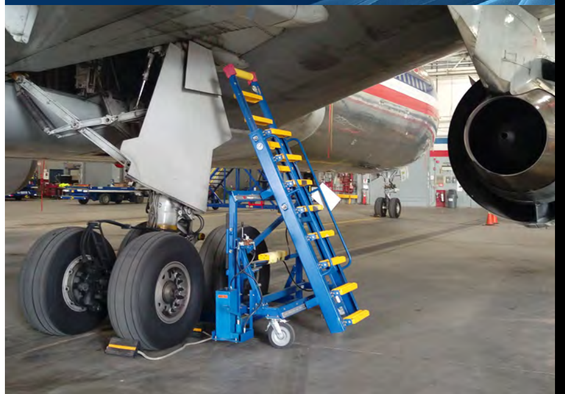

OUR FOCUS

Creating innovative safety products for a variety of industries.

SOME OF THE INDUSTRIES WE WORK WITH INCLUDE

- Construction
- Manufacturing
- Government, Defense and Security
- Aviation and Aerospace
- Automotive
- Education
- Energy
- Material Handling

SAFETY IN THE AIR, STARTS ON THE GROUND

Using a collaborative approach, our in-house design department at Liftsafe Fall Protection works closely with the engineers, designers, project managers and skilled trades of our parent company, Liftsafe Engineering and Service Group, to ensure a cross collaboration of technical knowledge and ideas.

This allows us to provide our customers with the best custom access solutions with all custom work designed and engineered to the highest standards using the latest Inventor CAD software. And, by working alongside your engineering, safety and maintenance teams, we develop custom products based on your input, while meeting the most current industry regulations. Together, we will find a solution to address your exact needs.

If there is one thing that sets us apart from other maintenance equipment companies, it's our willingness to deliver remarkable experiences. We pride ourselves on top quality customer service, providing quick quotes, innovative design, and high quality. In addition, we are the go-to industrial product provider for Fortune 500 companies.

WHETHER YOU NEED TO UPGRADE, REPLACE OR YOU'RE LOOKING FOR YOUR FIRST SYSTEM, OUR EXPERTS HAVE THE RIGHT SOLUTION FOR YOU.

BACKED BY ENGINEERS

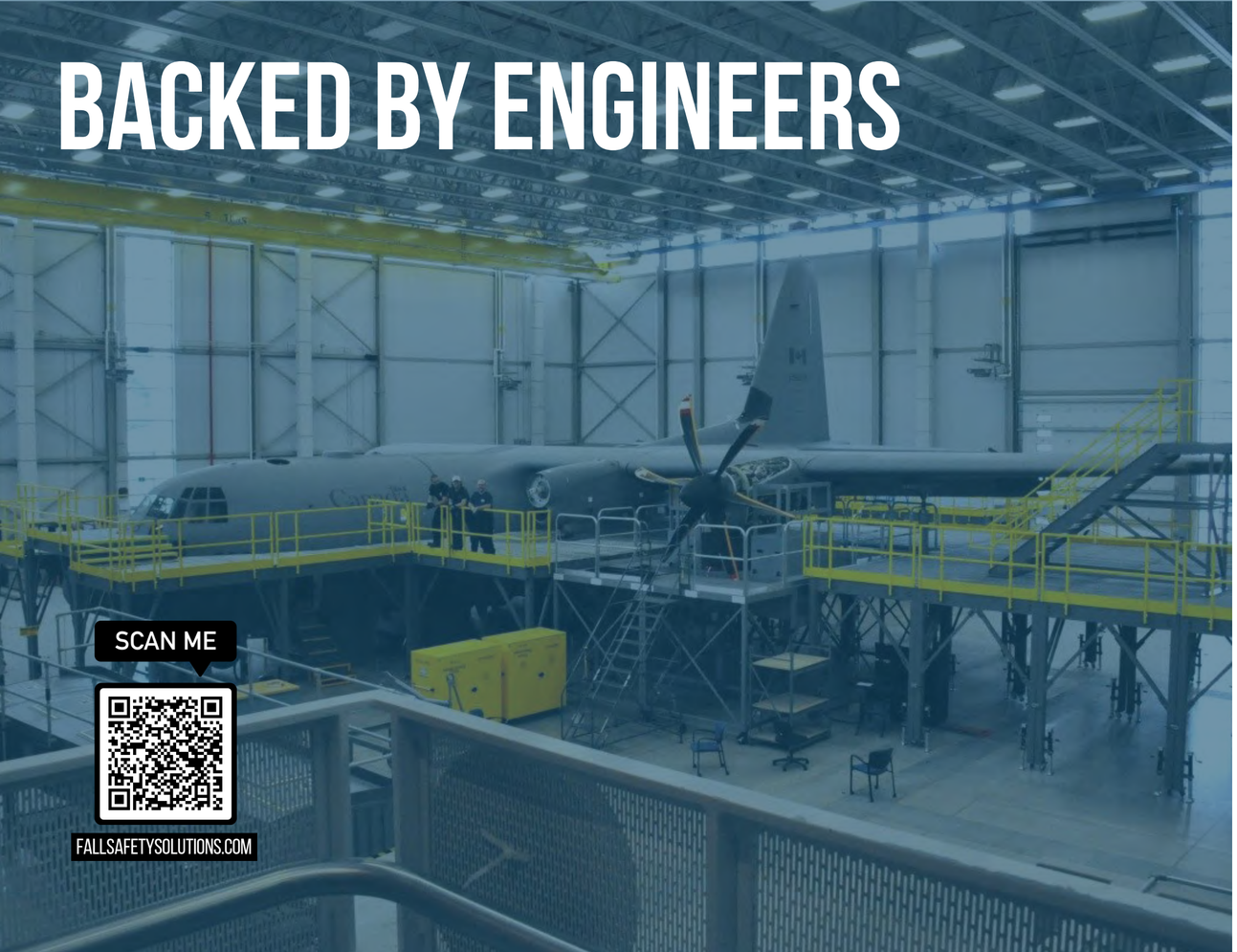

SCAN ME

FALLSAFETYSOLUTIONS.COM

WORLD CLASS CUSTOM DESIGNED PRODUCTS

Whether you only have an idea or you already have drawings, our goal is not only to make your vision a reality, but to exceed your expectations. We do this with our collaborative approach to design and engineering. We work together with your team to truly understand your needs, identifying the product requirements and challenges. This synergistic approach enables us to create an appropriate solution while ensuring the quality, safety and reliability of our custom designed products.

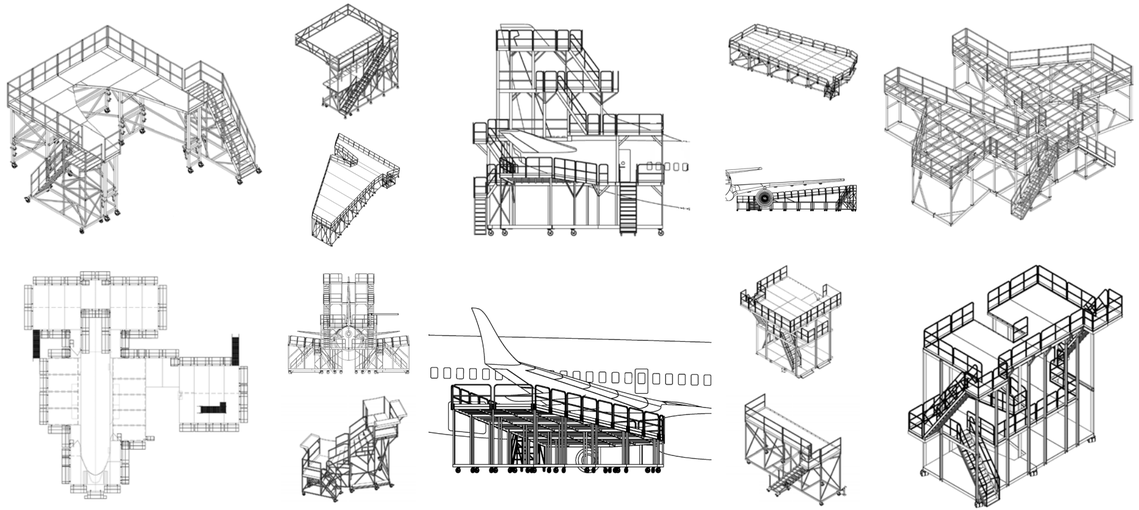

ENGINE ACCESS STANDS

SCAN ME

FALLSAFETYSOLUTIONS.COM

LADDERS AND SIDE SCROLL STANDS

Liftsafe Fall Protection designs and engineers engine access ladders and side scroll stands that give maintenance personnel the ability to perform work above and below the cowling.

Equipped with anti-fatigue ladder steps rather than narrow ladder rungs, ensuring comfort when using the stands to change LRU'S, adjust components or connect and disconnect engines and nacelles. Functionality improves with a lighter design, smaller footprint and greater geometry. These stands are currently in use at multiple operators, MRO'S and aircraft manufacturers.

These stands and ladders are primarily designed for Engine Access under the "C" Duct and Outboard Engine access. Secondary access points include Pylons, Wing Refuel Panel, Bulk Cargo, Aft Pressure Bulkhead Access Panel, APU Servicing, Wing Tip Nav Lights, Flap Canoes and Fairings, Wing Landing Lights, Passenger Windows, Wing Access, Main Entry Door Sills, Windshield Inspections, Pitot Probe Tube Inspections and Replacements, AOA and True Airspeed Probes Inspections and Replacements, Static Port Inspections and Replacements and Trailing Edge Actuator Inspections and Replacements. In addition, all of our DF Series stands are engineered to meet or exceed OSHA and ANSI standards.

Aside from providing a safe working platform for your technicians, other benefits of a Liftsafe Fall Protection's DF Series Stands include easy storage, anti-slip and anti-bounce tread, high durability steel or aluminum construction, height adjustability options, as well as your choice of powder coat or custom colour to coordinate with your brand. Between our innovative designs, quality materials, and world-class fabrication, our goal is not only to make your vision a reality, but to exceed your expectations.

Our expert team will work with you to develop a product that is suitable to your particular needs.

ICON LEGEND

- One User Per Platform
- Two Users Per Platform
- Four Users Per Side
- 1 Person Movement
- 2 Person Movement
- Towing Speed 6 MPH

DF071554-06 ENGINE ACCESS STAND

DF071554-06
ENGINE ACCESS STAND

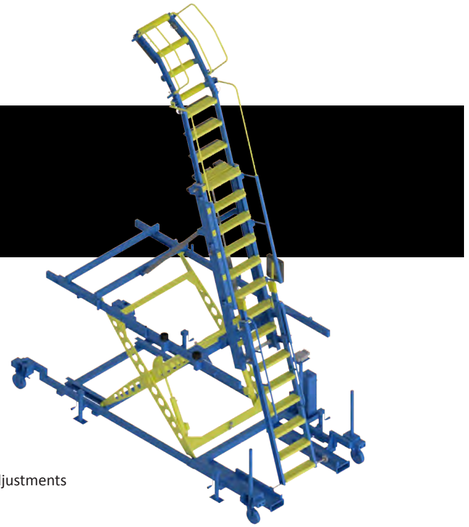

FOR OUTBOARD ENGINE ACCESS

Aircraft technicians use these stands to change LRU'S, adjust components, or connect/disconnect engines and nacelles.

HIGHLIGHTS

- Anti-slip, anti-fatigue ladder steps
- Lightweight design and construction
- Tight footprint utilizing minimal floorspace
- Adjustable scissor lift base
- Corrosion and Skydrol® resistant finish
- Fail-safe hydraulic cylinder locks
- Split wheel casters for easy movement
- Stainless steel hardware
- Full fall restraint provisions
- Optional pneumatic height and angle adjustments
- 2 year limited warranty on components
- 10 year limited warranty on structure

TECHNICAL DATA

Height (low)	126 1/2" / 321.3 cm
Height (high)	239 1/4" / 607.6 cm
Width	89 7/8" / 228.2 cm
Length	161 3/4" / 410.8 cm
Unit Weight	2,400 lbs / 1,088.6 kg
Shipping Info (DIMS)	89 11/16" x 64 1/2" x 163 3/16" x 2400 lbs
Angles	73° - 83°
Weight Capacity	330 lbs / 150 kg
Towing Speed	6 MPH / 10 KPH
Fully Extended	Ladder: 128 Strokes Tilt: 43 Strokes Scissors: 86 Strokes

Fall Restraint	Equipped
Frame Material	Steel
Ladder Material	Aluminum
Padding Material	Contact Areas
Caster Details	8" / 20.3 Split Caster with Brake and Swivel Lock
Finish	Powder Coated
Controls	Hydraulic Foot Pump
Certifications	ANSI-ASC A14.7, BS EN 131.7, CE, DIN EN 12312-8 & EN 1915-1

OPTIONAL ACCESSORIES

Air Powered Pump	X
Fork Pockets	X
Fold Away Towbar	X
Level Jacks	X
Platform Adaptors	X
Straight Extension	X
Utilities Package	X
777X Pylon Extension	X

AIRCRAFT APPLICATION

B747	X
B757	X
B777X (w/ Extension)	X
A340	X
A380	X
A400	X
Custom	X

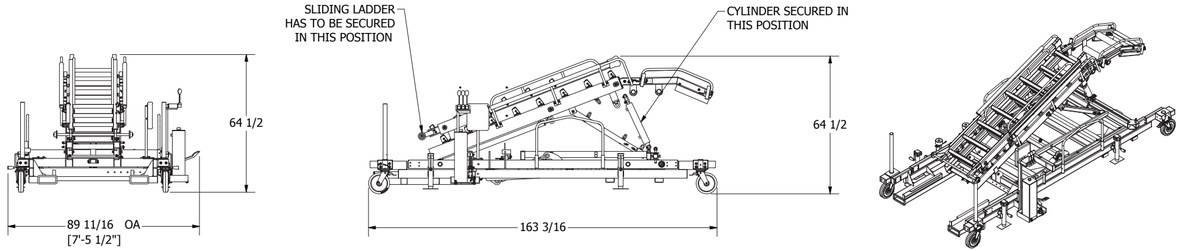

STAND IN COLLAPSED POSITION

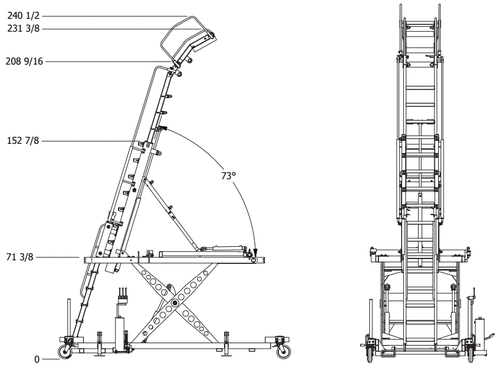

STAND @ 73° LADDER EXTENDED

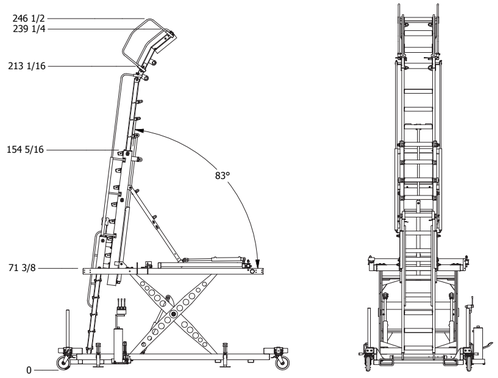

STAND @ 83° LADDER EXTENDED

DF071554-07-08, 10, 12 ENGINE ACCESS STANDS

FOR OVER AND UNDER COWLING ACCESS

Aircraft technicians use these stands to access under and over cowling areas, change LRU's, adjust components and connect/disconnect engines and nacelles.

HIGHLIGHTS

- Anti-slip, anti-fatigue ladder steps
- Lightweight design and construction
- Tight footprint utilizing minimal floorspace
- Safe solution in a range of climates worldwide
- Corrosion and Skydrol® resistant finish
- Fail-safe hydraulic cylinder locks
- Split wheel casters for easy movement
- Stainless steel hardware
- Full fall restraint provisions
- Optional pneumatic height and angle adjustments
- 2 year limited warranty on components
- 10 year limited warranty on structure

TECHNICAL DATA

Height (low)	129 1/4" / 328.3 cm
Height (high)	224 1/2" / 570.2 cm
Width	87 3/4" / 222.9 cm
Length	122 7/8" / 312.1 cm
Unit Weight	1,150 lbs / 521.6 kg
Shipping Info (DIMS)	88" x 52" x 123" x 1,150 lbs
Angles	52° - 83°
Weight Capacity	330 lbs / 150 kg
Towing Speed	6 MPH / 10 KPH
Fully Extended	Ladder: 57 Strokes Tilt: 23 Strokes

Fall Restraint	Equipped
Frame Material	Aluminum
Ladder Material	Aluminum
Padding Material	Contact Areas
Caster Details	8" / 20.3 Split Caster with Brake and Swivel Lock
Finish	Powder Coated
Controls	Hydraulic Foot Pump
Certifications	ANSI-ASC A14.7, BS EN 131.7, CE, DIN EN 12312-8 & EN 1915-1

OPTIONAL ACCESSORIES

Air Powered Pump	X
Fork Pockets	X
Fold Away Towbar	X
Level Jacks	X
Platform Adaptors	X
Straight Extension	X
Utilities Package	X
777X Pylon Extension	X

AIRCRAFT APPLICATION

B747	X
B757	X
B787	X
B767	X
B777X (w/ Extension)	X
A310	X
A320	X
A330	X
A340	X
A350	X
A380	X
A400	X
Custom	X

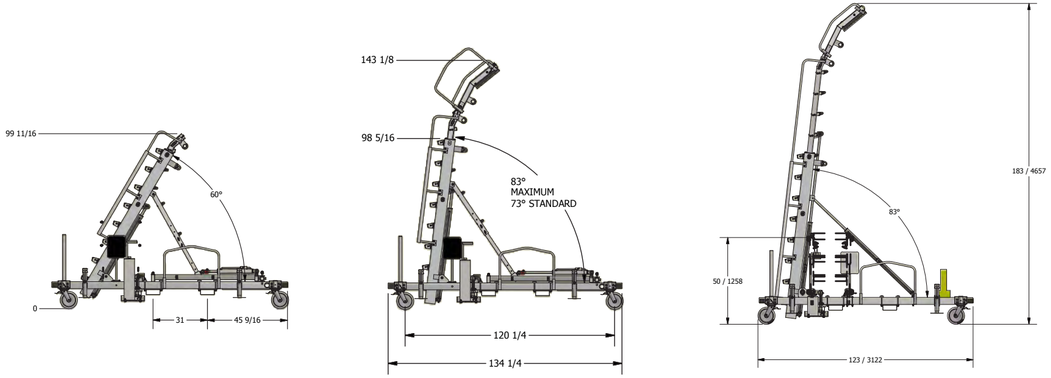

DF071554-07-08 IN LOWER, MID AND EXTENDED POSITION

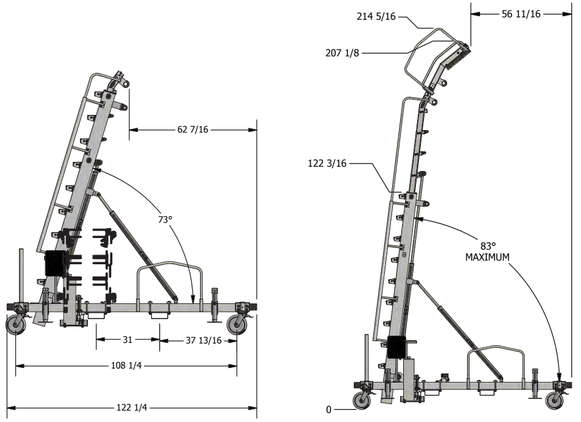

DF071554-07-10 WITH AND WITHOUT EXTENSION

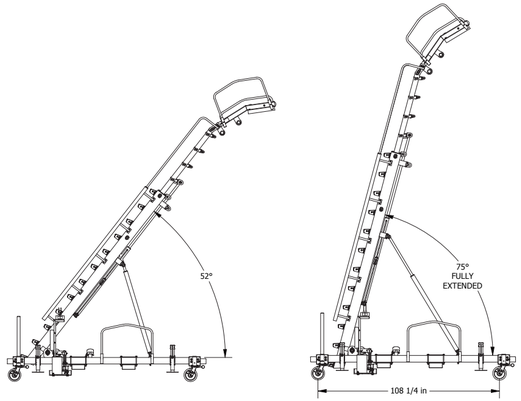

DF071554-07-12 LOWERED AND FULLY EXTENDED

DF071563-01
SIDE SCROLL STAND

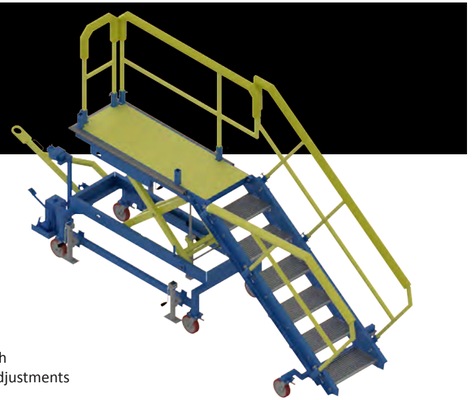

FOR C-DUCT ENGINE CORE AREAS

Designed to access under C-duct engine core areas on large engine wide body aircraft. Integrates removable handrails which allow for inboard or outboard use.

HIGHLIGHTS

- Vertically adjustable platform
- Removable and adjustable handrails
- Suitable for two technicians
- Flexibility for use on most wide body aircraft
- Anti-fatigue and anti-slip steps
- Fail-safe hydraulic cylinder locks
- Split wheel casters for easy movement
- Stainless steel hardware
- Corrosion resistant powder coated finish
- Optional pneumatic height and angle adjustments
- 2 year limited warranty on components
- 10 year limited warranty on structure

TECHNICAL DATA

Height (low)	83" / 210.8 cm
Height (high)	105" / 266.7 cm
Width	44" / 111.8 cm
Length	138" / 350.5 cm
Platform Size	23" x 69" / 58.4 cm x 175.3 cm
Shipping Info (DIMS)	55" x 159" / 139.7 cm x 403.9 cm
Weight Capacity	1,000 lbs / 453.6 kg
Towing Speed	6 MPH / 10 KPH
Stair Angles	Extended: 37° Collapsed: 18°

Material	Steel
Standard Features	4 Corner Leveling Jacks Fold Away Tow Bars Fork Pockets
Padding Material	Contact Areas
Caster Details	8" / 20.3 Split Caster with Brake and Swivel Lock
Finish	Powder Coated
Controls	Hydraulic Foot Pump
Certifications	ANSI-ASC A14.7, BS EN 131.7, CE, DIN EN 12312-8 & EN 1915-1

OPTIONAL ACCESSORIES

Air Powered Pump	X
Fall Restraint Anchor Points	X
Utilities Kit	X
Custom Platform Size and Height Ranges	X

AIRCRAFT APPLICATION

B787	X
A330	X
A350	X
Custom	X

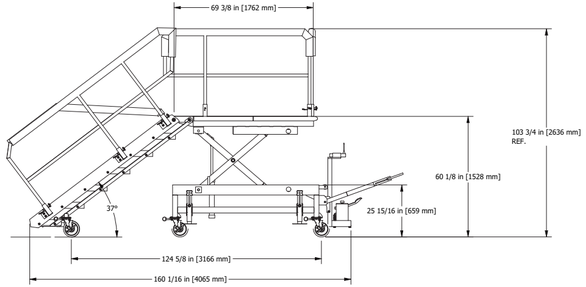

EXTENDED POSITION

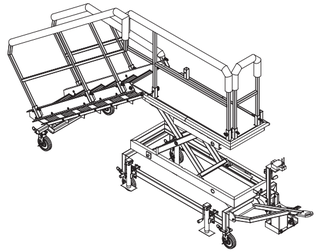

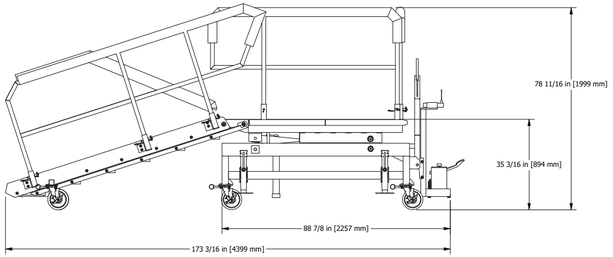

COLLAPSED POSITION

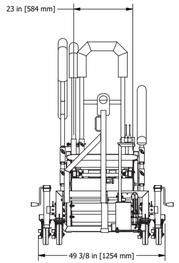

DF071562-02
SIDE SCROLL STAND

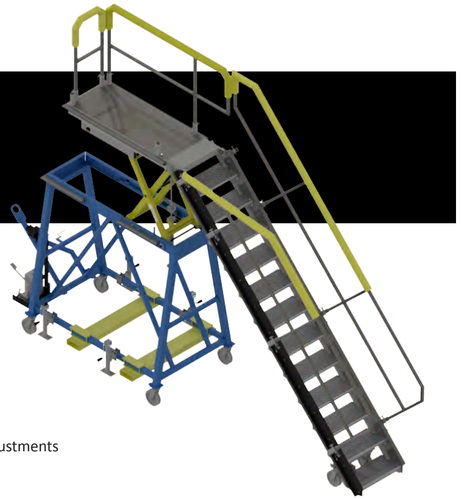

FOR C-DUCT ENGINE CORE AREAS

Designed to access under C-duct engine core areas on large engine wide body aircraft. Integrates removable handrails which allow for inboard or outboard use.

HIGHLIGHTS

- Vertically adjustable platform
- Removable and adjustable handrails
- Suitable for two technicians
- Flexibility for use on most wide body aircraft
- Anti-fatigue and anti-slip steps
- Fail-safe hydraulic cylinder locks
- Split wheel casters for easy movement
- Stainless steel hardware
- Corrosion resistant powder coated finish
- Optional pneumatic height and angle adjustments
- 2 year limited warranty on components
- 10 year limited warranty on structure

TECHNICAL DATA

Height (low)	131" / 332.7 cm
Height (high)	165" / 419.1 cm
Width	43.5" / 110.5 cm
Length	202" / 513.1 cm
Platform Size	23" x 69" / 58.4 cm x 175.3 cm
Shipping Info (DIMS)	62" x 223" / 157.5 cm x 566.4 cm
Weight Capacity	1,000 lbs / 453.6 kg
Towing Speed	6 MPH / 10 KPH
Stair Angles	Extended: 46° Collapsed: 30°

Material	Steel
Standard Features	4 Corner Leveling Jacks Fold Away Tow Bars Fork Pockets
Padding Material	Contact Areas
Caster Details	8" / 20.3 Split Caster with Brake and Swivel Lock
Finish	Powder Coated
Controls	Hydraulic Foot Pump
Certifications	ANSI-ASC A14.7, BS EN 131.7, CE, DIN EN 12312-8 & EN 1915-1

OPTIONAL ACCESSORIES

Air Powered Pump	X
Fall Restraint Anchor Points	X
Utilities Kit	X
Custom Platform Size and Height Ranges	X

AIRCRAFT APPLICATION

B777X	X
777 Legacy	X
Custom	X

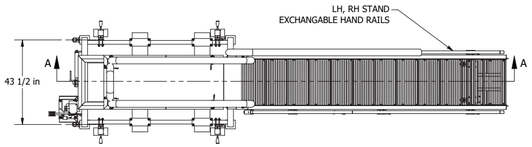

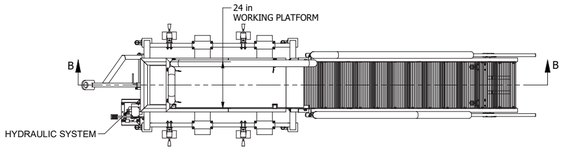

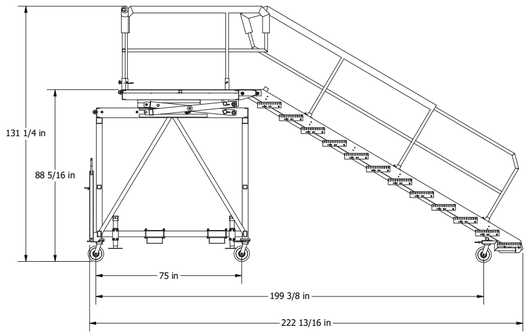

COLLAPSED POSITION

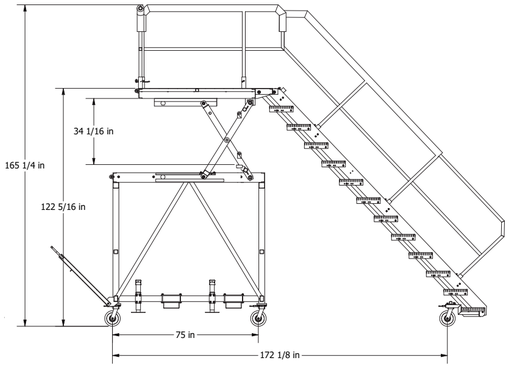

EXTENDED POSITION

DF071564-01 ENGINE ACCESS SIDE SCROLL STAND

DF071564-01
SIDE SCROLL STAND

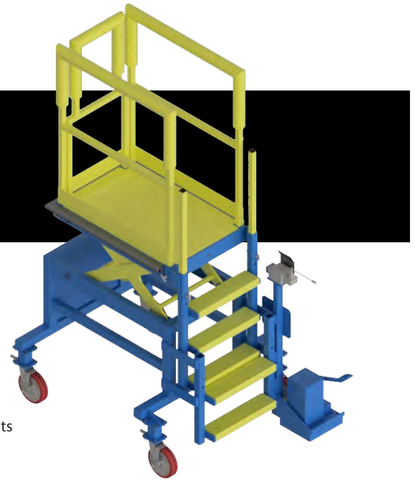

FOR UNDER COWL & THRUST REVERSER AREAS

Designed to access under the cowl and thrust reverser areas on the A320 series of aircraft.

HIGHLIGHTS

- Vertically adjustable platform
- Removable and adjustable handrails
- Anti-fatigue and anti-slip steps
- Fail-safe hydraulic cylinder locks
- Split wheel casters for easy movement
- Stainless steel hardware
- Corrosion resistant powder coated finish
- Optional pneumatic height and angle adjustments
- 2 year limited warranty on components
- 10 year limited warranty on structure

TECHNICAL DATA

Height (low)	36" / 91.44 cm
Height (high)	54" / 137.16 cm
Width	36" / 91.44 cm
Length	52" / 132.08 cm
Platform Size	23" x 35" / 58.4 cm x 88.9 cm
Shipping Info (DIMS)	48" x 72" / 121.92 cm x 182.88 cm
Weight Capacity	330 lbs / 150 kg
Towing Speed	6 MPH / 10 KPH

Material	Steel
Padding Material	Contact Areas
Caster Details	8" / 20.3 Split Caster with Brake and Swivel Lock
Finish	Powder Coated
Controls	Hydraulic Foot Pump
Certifications	ANSI-ASC A14.7, BS EN 131.7, CE, DIN EN 12312-8 & EN 1915-1

OPTIONAL ACCESSORIES

Air Powered Pump	X
Fall Restraint Anchor Points	X
Utilities Kit	X
Custom Platform Size and Height Ranges	X

AIRCRAFT APPLICATION

A320	X
Custom	X

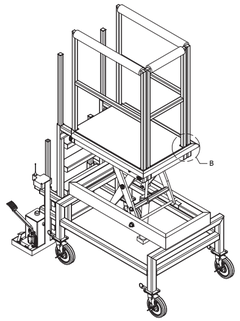

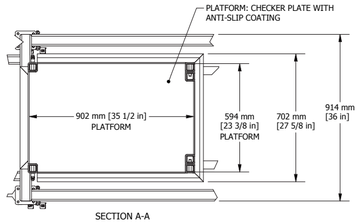

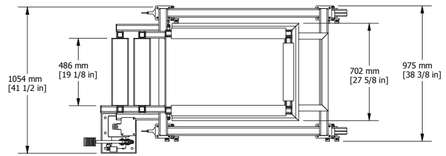

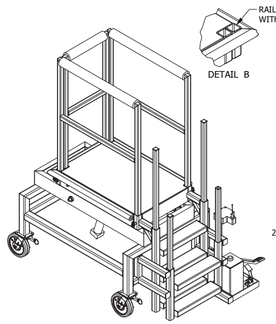

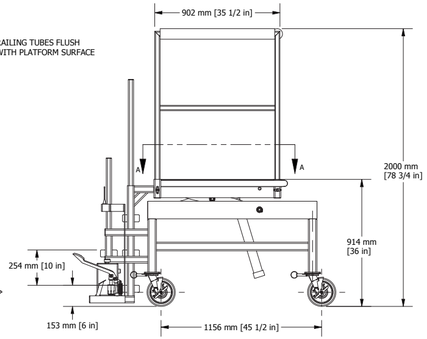

COLLAPSED POSITION

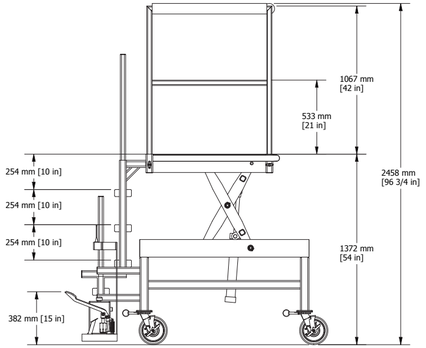

EXTENDED POSITION

LANDING GEAR ACCESS STANDS

SCAN ME

FALLSAFETYSOLUTIONS.COM

LADDERS AND PLATFORMS

Liftsafe Fall Protection designs and engineers maintenance access stands specifically for landing gear access and change functions.

The DF Series landing gear access ladder extends, collapses and is equipped with a ladder that can be positioned laterally in locked mode. The DF Series landing gear change stand comes in two pieces and is height adjustable. Each helps you perform the important work on the ground efficiently and ensures your fleet stays in the air, while keeping your maintenance crews safe.

The Landing Gear Access Stand provides safe access to all maintenance locations of the main and nose landing gear. The base frame is designed to adjust to most wheel assembly configurations on the main and nose gear. The hydraulic height adjustment, one hand lateral operation and full swivel and lock casters allow single technician placement and use. The Landing Gear Access Stand utilizes anti-slip, anti-fatigue ladder steps and fall restraint anchorage on the upper ladder. A corrosion-resistant powder coat finish ensures the longevity of the stand. Lift truck fork pockets are included in the base frame for easy relocation.

Our landing gear change stand units can be built to meet the requirements of any aircraft landing gear scenario. This stand is an adjustable-height maintenance platform, designed for service on landing gear struts and wheel bay access. The two platforms can be used either as a set or separately, based on the work to be performed. The platform is easily maneuvered with telescoping handrails while being fully compliant with global standards and regulations.

In addition, all of our DF Series are engineered to meet or exceed OSHA and ANSI standards.

ICON LEGEND

- One User Per Platform
- Two Users Per Platform
- Four Users Per Side
- 1 Person Movement
- 2 Person Movement
- Towing Speed 6 MPH

DF071592-04
LANDING GEAR ACCESS STAND

MAIN AND NOSE LANDING GEAR ACCESS

Built to handle all wide-body (and B757) landing gear and nose gear applications. It will also provide access to the A320 family main gear.

HIGHLIGHTS

- Anti-slip, anti-fatigue ladder steps
- Lightweight design and construction
- 43" / 109.2 cm lateral ladder adjustability
- Access to aft fuselage, access panels, forward avionics and access hatches
- Corrosion and Skydrol® resistant finish
- Fail-safe hydraulic cylinder locks
- Split wheel casters for easy movement
- Stainless steel hardware
- Full fall restraint provisions
- 2 year limited warranty on components
- 10 year limited warranty on structure

TECHNICAL DATA

Height (low)	85 3/4" / 217.8 cm
Height (high)	139 1/8" / 353.3 cm
Width	87" / 220.9 cm
Length	96" / 243.8 cm
Unit Weight	1,100 lbs / 498.9 kg
Shipping Info (DIMS)	87" x 96" x 96" x 1,100 lbs
Lateral Displacement	56 1/2" / 143.5 cm on centre
Weight Capacity	330 lbs / 150 kg
Towing Speed	6 MPH / 10 KPH
Fully Extended	Ladder: 57 Strokes

Fall Restraint	Equipped
Frame Material	Steel
Ladder Material	Steel
Padding Material	Contact Areas
Caster Details	**Back:** 8" / 20.3 Split Caster with Brake and Swivel Lock **Front:** 6" / 15.2 cm with swivel
Finish	Powder Coated
Controls	Hydraulic Foot Pump
Certifications	ANSI-ASC A14.7, BS EN 131.7, CE, DIN EN 12312-8 & EN 1915-1

OPTIONAL ACCESSORIES

Air Powered Pump	X
Side Mount Towbar	X
Utilities Package	X
787 "Low Leg" fit Under Door	X

AIRCRAFT APPLICATION *

B737	X
B747	X
B767	X
B777	X
B787	X
A320 Family	X
A330	X
A340	X
A380	X
Embraer 175	X
Embraer 190	X
Engine Access	X
Custom	X

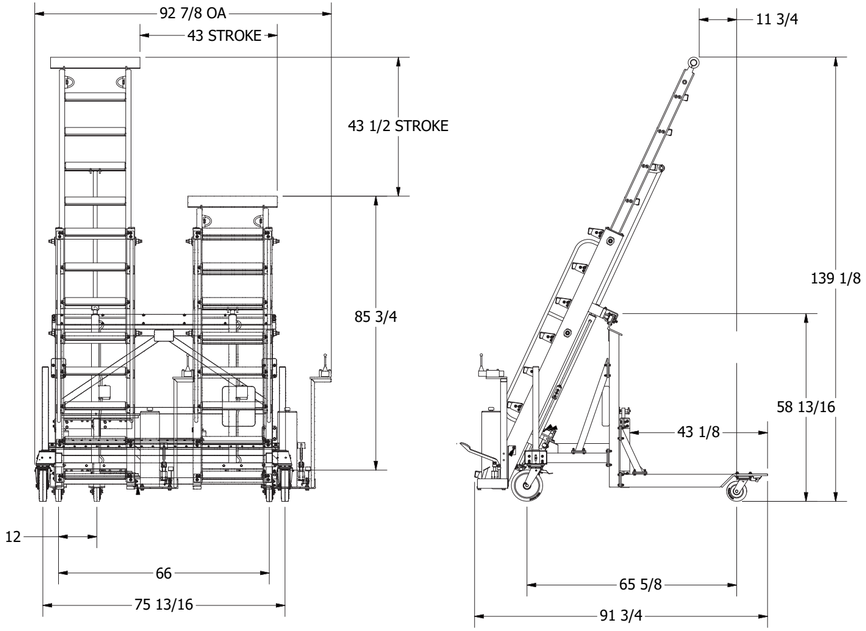

STAND EXTENDED AND COLLAPSED

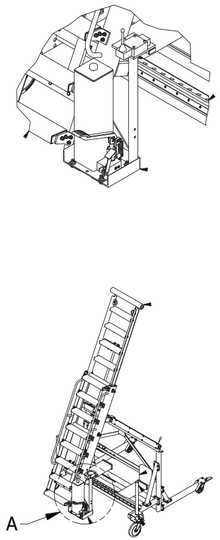

DETAIL A

DF071592-01
LANDING GEAR CHANGE STAND

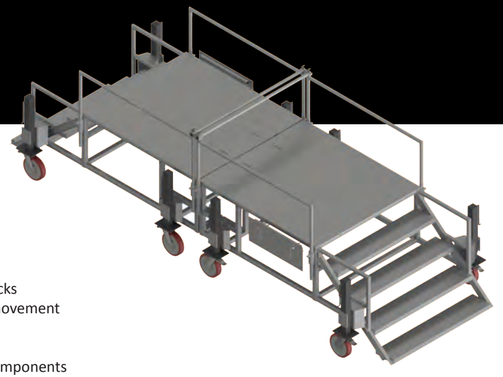

LANDING GEAR AND WHEEL WELL ACCESS

Adjustable height maintenance platform designed for service on landing gear struts and wheel bay access.

HIGHLIGHTS

- Adjustable height maintenance platform
- Telescoping handrails
- Lightweight and durable design
- Can be customized to meet any aircraft landing gear scenario
- Low maintenance finish
- Fail-safe hydraulic cylinder locks
- Split wheel casters for easy movement
- Stainless steel hardware
- Full fall restraint provisions
- 2 year limited warranty on components
- 10 year limited warranty on structure

TECHNICAL DATA

Height (low)	36 1/10" / 91.6 cm
Height (high)	50 1/2" / 128.2 cm
Width	73 5/16" / 182.2 cm
Length	196 1/4" / 498.4 cm
Unit Weight	430 lbs / 195 kg x 2 Stands
Shipping Info (DIMS)	73 5/16" x 36 1/16" x 96" x 430 lbs x 2 Stands
Configuration	2 Stands - used individually or together
Weight Capacity	660 lbs / 300 kg each
Towing Speed	6 MPH / 10 KPH
Fully Extended	Ladder: 57 Strokes

Fall Restraint	Equipped
Frame Material	Aluminum
Ladder Material	Aluminum
Padding Material	Contact Areas
Caster Details	8" / 20.3 Split Caster with Brake and Swivel Lock
Finish	Polished Aluminum
Other	Antislip Aluminum Plate Grating
Certifications	ANSI-ASC A14.7, BS EN 131.7, CE, DIN EN 12312-8 & EN 1915-1

OPTIONAL ACCESSORIES

Fork Pockets	X
Fold Away Towbar	X
Utilities Package	X
Custom Heights and Sizes	X

AIRCRAFT APPLICATION

B737	X
Custom	X

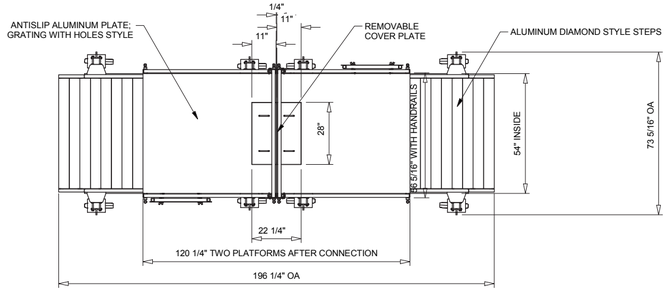

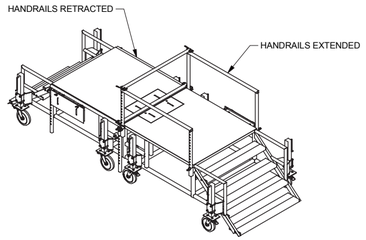

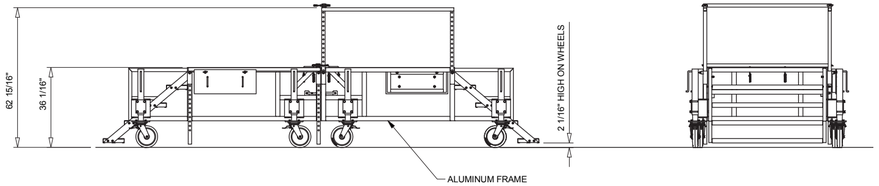

STAND WITH JACKS RAISED

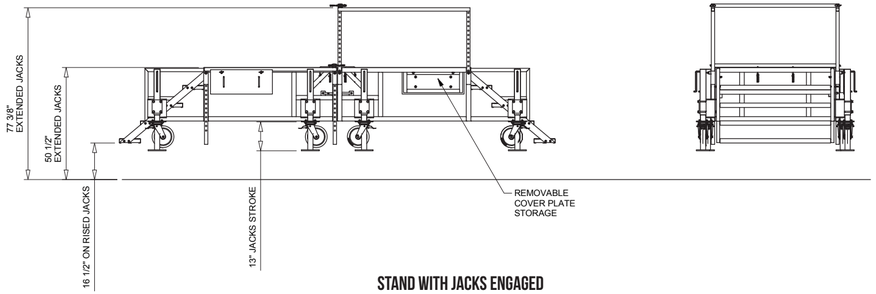

STAND WITH JACKS ENGAGED

WHEEL WELL & LOWER CARGO ACCESS STANDS

SCAN ME

FALLSAFETYSOLUTIONS.COM

PLATFORM STANDS

Liftsafe Fall Protection designs and engineers maintenance access stands specifically for access to the wheel well and lower cargo areas of your aircraft.

Ergonomically designed and simple to operate, we offer both standard and custom platform stands that allow safe access to these specific areas of your aircraft. The important work on the ground ensures your fleet stays in the air, while keeping your maintenance crews safe.

The DF Series Wheel Well and Lower Cargo access stands have been designed for maintenance access points for a multitude of aircraft. The lowered position is designed to clear wheel well entry points and has been tested and is operational on both Airbus and Boeing wide body aircraft, including the B757. Each unit is in service at a multitude of operators, MRO'S and manufacturers. Optional telescopic side rails ensure safety compliant access to the forward and aft lower cargo holds. The powder coat finish ensures corrosion resistance maintaining the longevity of your stand.

These stands are also hydraulically actuated via an ergonomically positioned foot pump and have collapsible guardrails. Anti-fatigue ladder steps thereby ensuring safety of your maintenance staff.

Our Professional Engineers can design custom models based on your specific requirements. Each stand is designed and tested in accordance with ANSI-ASC A14.7 and BS EN 131.7 including CE Certification.

ICON LEGEND

- One User Per Platform
- Two Users Per Platform
- Four Users Per Side
- 1 Person Movement
- 2 Person Movement
- Towing Speed 6 MPH

DF071556-03
WHEEL WELL PLATFORM

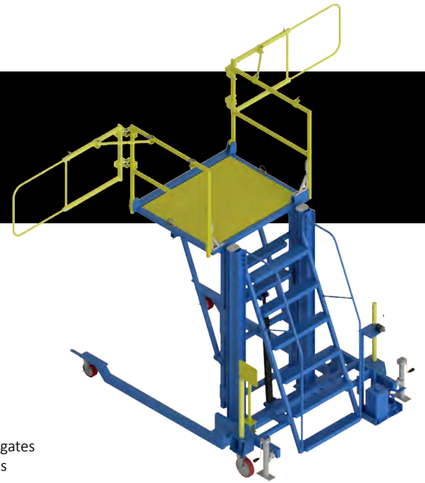

DESIGNED FOR WIDE BODY AIRCRAFT

Designed to clear wheel well entry points and has been tested and is operational on both Airbus and Boeing wide body aircraft, including the B757.

HIGHLIGHTS

- Anti-slip, anti-fatigue ladder steps
- Lightweight design and construction
- Collapsible guardrails
- Optional extension rails for safe cargo access
- Corrosion and Skydrol® resistant finish
- Fail-safe hydraulic cylinder locks
- Split wheel casters for easy movement
- Stainless steel hardware
- Full fall restraint provisions
- Optional front and rear guardrails and gates
- 2 year limited warranty on components
- 10 year limited warranty on structure

TECHNICAL DATA

Height (low)	73" / 185.4 cm
Height (high)	103" / 261.6 cm
Width	79 3/4" / 202.5 cm
Length	105 1/2" / 267.9 cm
Unit Weight	1,200 lbs / 544.3 kg
Shipping Info (DIMS)	79 3/4" x 80 1/4" x 105 1/2" x 1,200 lbs
Weight Capacity	660 lbs / 300 kg
Towing Speed	6 MPH / 10 KPH
Fall Restraint	Equipped
Fully Extended	Ladder: 56 Strokes

Frame Material	Steel
Ladder Material	Aluminum
Padding Material	Contact Areas
Caster Details	**Back:** 8" / 20.3 Split Caster with Brake and Swivel Lock **Front:** 6" / 15.2 cm with Swivel
Finish	Powder Coated
Controls	Hydraulic Foot Pump
Certifications	ANSI-ASC A14.7, BS EN 131.7, CE, DIN EN 12312-8 & EN 1915-1

OPTIONAL ACCESSORIES

Air Powered Pump	X
Fold Away Towbar	X
Custom Heights and Platform Sizes	X
Telescopic Rails	X
Utilities Package	X
Lowered Front "Legs" for the 787 Main Gear Door	X

AIRCRAFT APPLICATION

B747	X
B757	X
B767	X
B777	X
B787	X
A320 Family	X
A330	X
A340	X
A350	X
A380	X
Custom	X

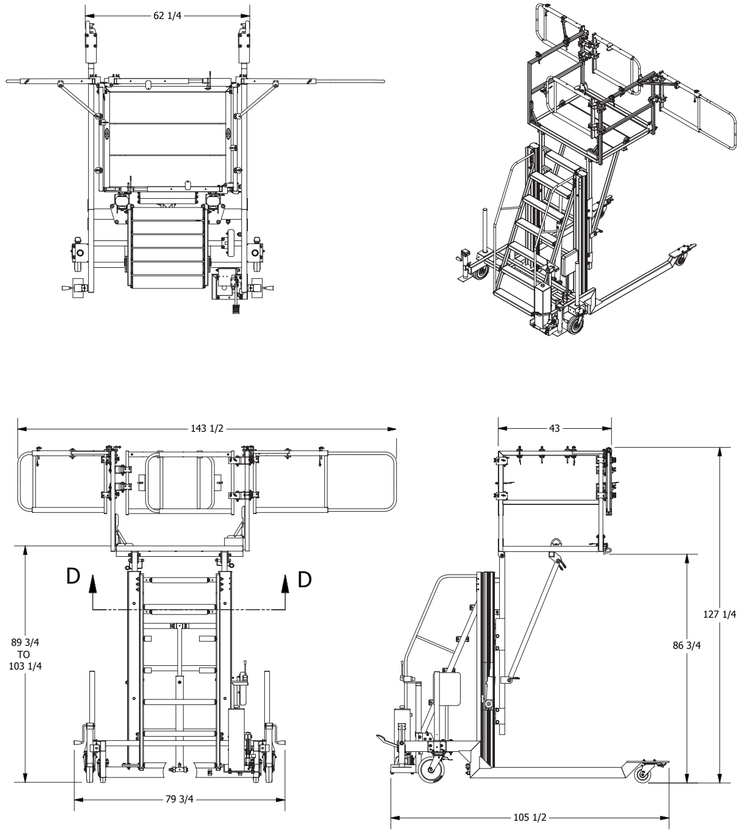

STAND IN OPERATIONAL MODE

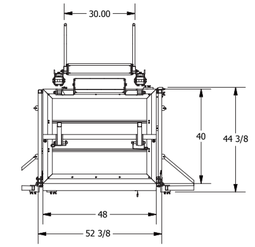

SECTION D-D

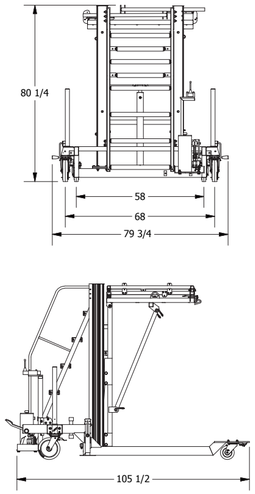

STAND DETAILS

DF071556-03XP
WHEEL WELL PLATFORM

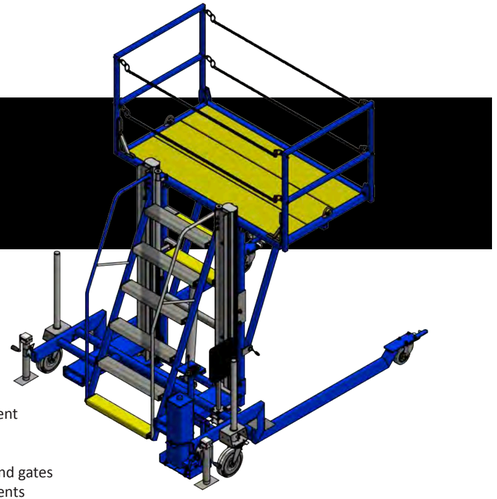

DESIGNED FOR TWO PERSON USE

Designed to clear wheel well entry points and has been tested and is operational on both Airbus and Boeing wide body aircraft, including the B757.

HIGHLIGHTS

- Anti-slip, anti-fatigue ladder steps
- Lightweight design and construction
- Collapsible guardrails
- Optional extension rails for safe cargo access
- Corrosion and Skydrol® resistant finish
- Fail-safe hydraulic cylinder locks
- Split wheel casters for easy movement
- Stainless steel hardware
- Full fall restraint provisions
- Optional front and rear guardrails and gates
- 2 year limited warranty on components
- 10 year limited warranty on structure

TECHNICAL DATA

Height (low)	73" / 185.4 cm
Height (high)	103" / 261.6 cm
Width	92" / 233.6 cm
Length	105 1/2" / 267.9 cm
Unit Weight	1,200 lbs / 544.3 kg
Shipping Info (DIMS)	79 3/4" x 80 1/4" x 105 1/2" x 1,200 lbs
Weight Capacity	660 lbs / 300 kg
Towing Speed	6 MPH / 10 KPH
Fall Restraint	Equipped
Fully Extended	Ladder: 56 Strokes

Frame Material	Steel
Ladder Material	Aluminum
Padding Material	Contact Areas
Caster Details	**Back:** 8" / 20.3 Split Caster with Brake and Swivel Lock **Front:** 6" / 15.2 cm with Swivel
Finish	Powder Coated
Controls	Hydraulic Foot Pump
Certifications	ANSI-ASC A14.7, BS EN 131.7, CE, DIN EN 12312-8 & EN 1915-1

OPTIONAL ACCESSORIES

Air Powered Pump	X
Fold Away Towbar	X
Custom Heights and Platform Sizes	X
Telescopic Rails	X
Utilities Package	X
Lowered Front "Legs" for the 787 Main Gear Door	X

AIRCRAFT APPLICATION

B747	X
B757	X
B767	X
B777	X
B787	X
A320 Family	X
A330	X
A340	X
A350	X
A380	X
Custom	X

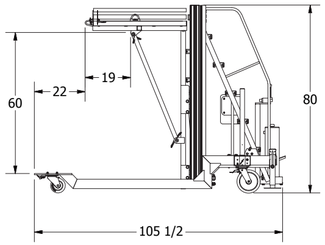

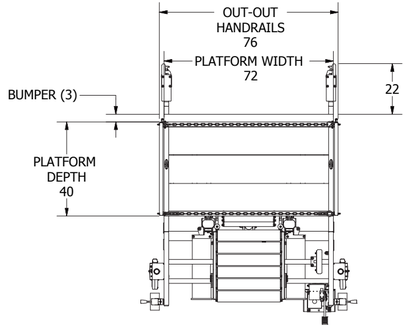

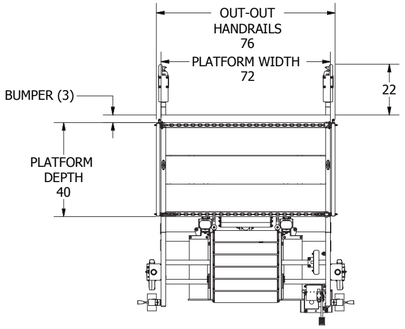

STAND IN OPERATIONAL MODE

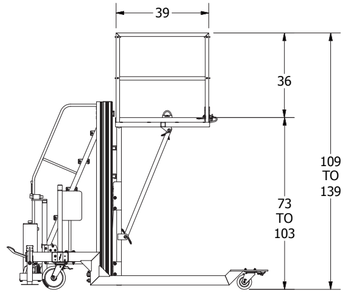

STAND DETAILS

AIRCRAFT ENTRY & CABIN INTERIOR STANDS

SCAN ME

FALLSAFETYSOLUTIONS.COM

STANDS FOR CREWS

We offer a wide range of standard and custom crew access stands, designed to keep your maintenance personnel safe while meeting all major safety standards. These platform access stands are designed for aircraft entry access, for a variety of different aircraft. As with all of our stands, we use anti-fatigue ladder rungs rather than narrow ladder rungs.

Primarily designed to provide safe access for crews to the main fuselage doors on a variety of aircraft.

The DF Series Aircraft Entry Stands have been designed for maintenance and cockpit crew access to the main deck. The 10-inch castors allow for easy mobility, ensuring the stand can be relocated quickly during aircraft maintenance. The design allows for use in hangar areas as well as line maintenance and ramp applications. This stand has been tested and is operational on all Boeing wide bodies in addition to the B757 and the entire Airbus wide body fleet of aircraft.

The Variable Height Aircraft Access Stand has an adjusting feature allowing for flush access to the door opening in order to help eliminate tripping hazards.

Models come in both fixed-height and variable-height configurations and all of our DF Series stands are built to meet or even exceed OSHA and ANSI standards, and the simplistic design ensures employee safety compliance.

In addition, custom solutions are always an option at Liftsafe Fall Protection. If you can envision it, our in-house team of engineers will work with you to create it.

ICON LEGEND

- One User Per Platform
- Two Users Per Platform
- Three Users Per Platform
- 1 Person Movement
- 2 Person Movement
- Towing Speed 6 MPH

DF101580-02
AIRCRAFT ENTRY STAND

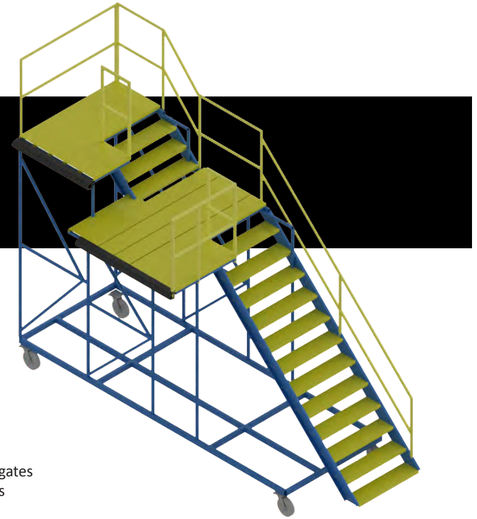

FIXED HEIGHT CREW ACCESS

Designed for maintenance and cockpit crew aircraft entry access to the main fuselage. Used in hangar areas as well as line maintenance and ramp applications.

HIGHLIGHTS

- Anti-slip, anti-fatigue ladder steps
- Lightweight design and construction
- Collapsible guardrails
- Optional extension rails for safe cargo access
- Corrosion and Skydrol® resistant finish
- Fail-safe hydraulic cylinder locks
- Split wheel casters for easy movement
- Stainless steel hardware
- Full fall restraint provisions
- Optional front and rear guardrails and gates
- 2 year limited warranty on components
- 10 year limited warranty on structure

TECHNICAL DATA

Height (low)	Custom
Height (high)	Custom
Width	Custom
Length	Custom
Unit Weight	Custom
Shipping Info (DIMS)	Custom
Weight Capacity	Custom
Towing Speed	6 MPH / 10 KPH
Fall Restraint	Not Required
Fully Extended	N/A

Frame Material	Steel
Ladder Material	Aluminum
Padding Material	Contact Areas
Caster Details	8" / 20.3 Split Caster with Brake and Swivel Lock
Finish	Powder Coated
Controls	N/A
Certifications	ANSI-ASC A14.7, BS EN 131.7, CE, DIN EN 12312-8 & EN 1915-1

OPTIONAL ACCESSORIES

Air Powered Pump	X
Utilities Package	X
Fall Restraint Anchor Points	X

AIRCRAFT APPLICATION

Custom	X

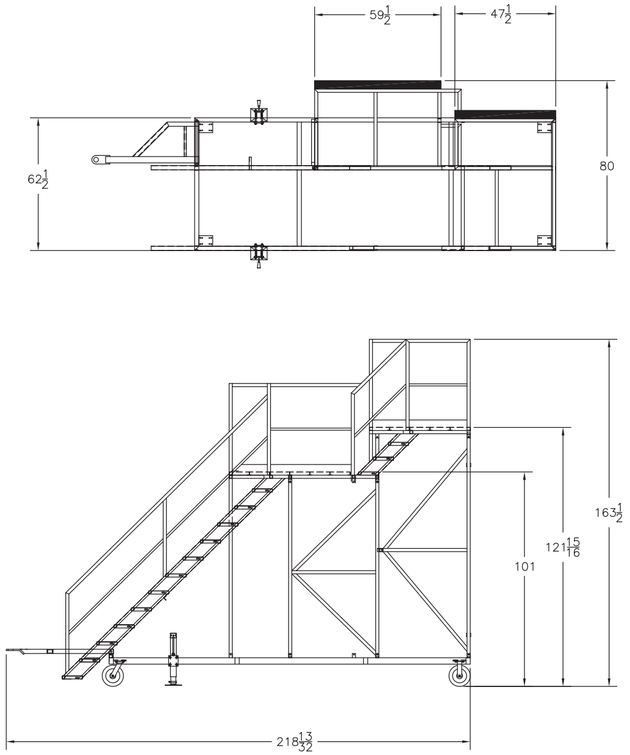

STAND IN OPERATIONAL MODE

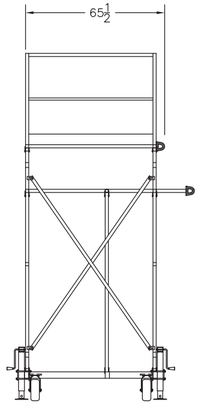

STAND DETAILS

DF101579-01
AIRCRAFT ENTRY STAND

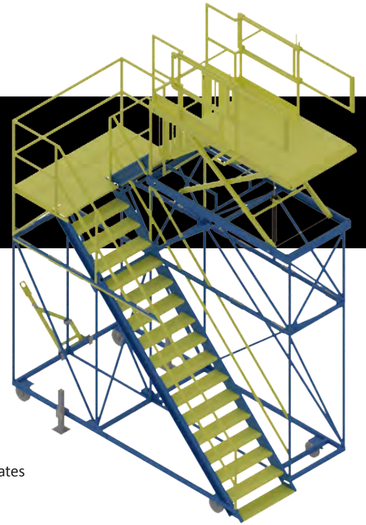

VARIABLE HEIGHT CREW ACCESS

Designed for maintenance and cockpit crew aircraft entry access to the main fuselage. Used in hangar areas as well as line maintenance and ramp applications.

HIGHLIGHTS

- Anti-slip, anti-fatigue ladder steps
- Lightweight design and construction
- Collapsible guardrails
- Optional extension rails for safe cargo access
- Corrosion and Skydrol® resistant finish
- Fail-safe hydraulic cylinder locks
- Split wheel casters for easy movement
- Stainless steel hardware
- Full fall restraint provisions
- Optional front and rear guardrails and gates
- 2 year limited warranty on components
- 10 year limited warranty on structure

TECHNICAL DATA

Height (low)	Custom
Height (high)	Custom
Width	Custom
Length	Custom
Unit Weight	Custom
Shipping Info (DIMS)	Custom
Weight Capacity	Custom
Towing Speed	6 MPH / 10 KPH
Fall Restraint	Not Required
Fully Extended	N/A

Frame Material	Steel
Ladder Material	Aluminum
Padding Material	Contact Areas
Caster Details	8" / 20.3 Split Caster with Brake and Swivel Lock
Finish	Custom Colour
Controls	Manual Foot Pump
Certifications	ANSI-ASC A14.7, BS EN 131.7, CE, DIN EN 12312-8 & EN 1915-1

OPTIONAL ACCESSORIES

Air Powered Pump	X
Utilities Package	X
Fall Restraint Anchor Points	X

AIRCRAFT APPLICATION

Custom	X

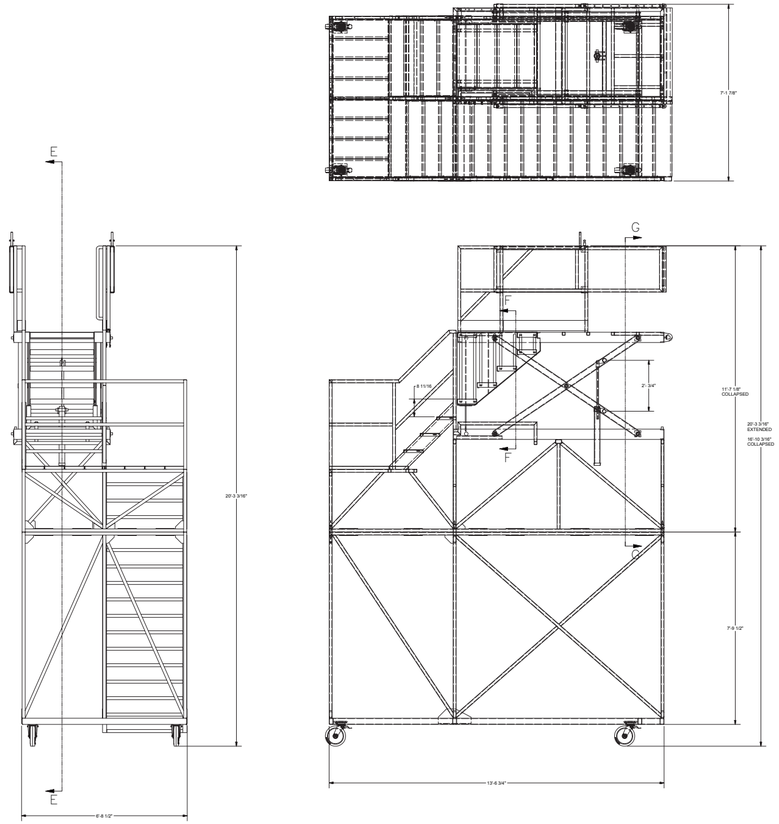

STAND IN OPERATIONAL MODE

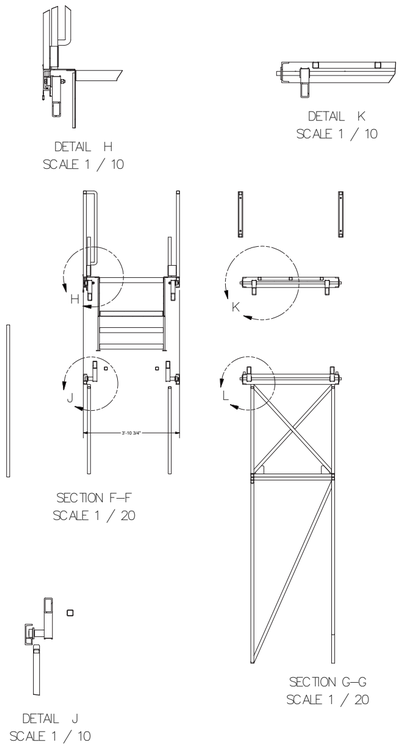

STAND DETAILS

DF071553-01

CABIN INTERIOR STAND

CABIN INTERIOR STAND

Designed for use in the aisle and is designed to fit over most economy class seats. Collapsible single worker unit for easy carrying and storage.

HIGHLIGHTS

- Single worker unit with a capacity of 330 lbs / 150 kg
- Ideal for ramp use
- Portable
- Collapsible for easy carrying and storage
- Durable aluminum construction
- Unit weight of only 25 lbs / 11.3 kg
- Designed to fit economy class seats
- Anti-slip ladder steps
- 2 year limited warranty on components
- 10 year limited warranty on structure

TECHNICAL DATA

Height (low)	47.63" / 120.9 cm
Height (high)	47.63" / 120.9 cm
Width	16.5" / 41.9 cm
Length	36.13" / 91.7 cm
Unit Weight	25 lbs / 11.3 kg
Shipping Info (DIMS)	16.5" x 47.63" x 36.13"
Weight Capacity	330 lbs / 150 kg
Towing Speed	N/A
Fall Restraint	Not Required
Fully Extended	N/A

Frame Material	Polished Aluminum
Ladder Material	Polished Aluminum
Padding Material	Rubber Non-Marking Feet
Caster Details	N/A
Finish	Polished Aluminum
Controls	N/A
Certifications	ANSI-ASC A14.7, BS EN 131.7, CE, DIN EN 12312-8 & EN 1915-1

AIRCRAFT APPLICATION

Interior	X

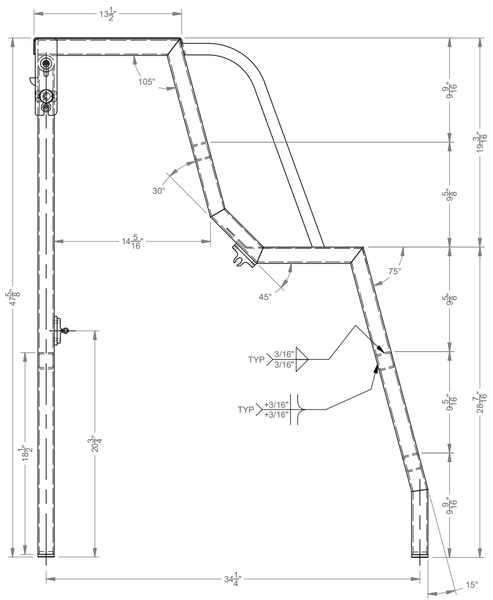

STAND IN OPERATIONAL MODE

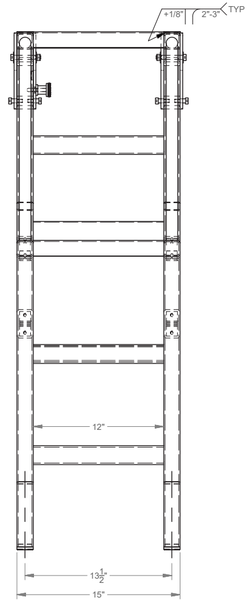

STAND DETAILS

MATERIAL HANDLING AND FALL SAFETY

SCAN ME

FALLSAFETYSOLUTIONS.COM

EXPERT LOGISTICAL SOLUTIONS.

Speed, safety and precision while moving loads that are high value. Airport operations and the maintenance, repair and overhaul industry are faced with this challenge every day while performing their jobs. Factor in that this is one of the most highly regulated industries in the world.

Liftsafe Fall Protection offers a range of material handling and fall safety equipment that enables quick turnarounds, handling control and full compliance in a time sensitive environment.

Whether it is moving aircraft parts, engines, equipment or stands, Liftsafe Fall Protection has a number of different solutions. From nose cowl dollies, wheel and brake service carts and powerful electric tugs to guardrail systems for fall protection.

Systems can be adjusted and in many cases customized to your specific needs without sacrificing any safety compliance.

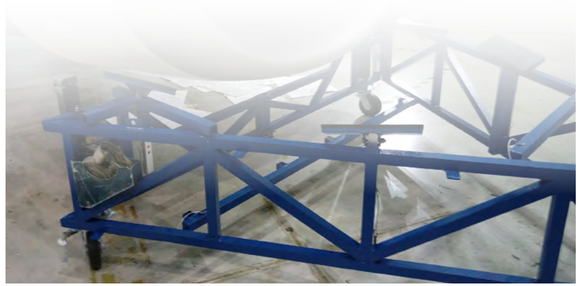

From inception, through to design, fabrication, and installation; Liftsafe Fall Protection specializes in standard and custom fixed-wing Aircraft Equipment. Working alongside our valued clients in the Commercial, Military, and Private Aircraft sectors, we have been recognized as a leader in quality, innovation, dependability and customer service. Our products are designed to safely support aircraft maintenance operations.

Our equipment is constructed with premium materials and products in a CWB certified fabrication shop while exceeding all regulatory requirements including OSHA, ANSI and CE.

ICON LEGEND

- One User Per Platform
- Two Users Per Platform
- Four Users Per Side
- 1 Person Movement
- 2 Person Movement
- Towing Speed 6 MPH

DF071560-01

NOSE COWL DOLLY

FOR NOSE COWL REMOVAL AND INSTALLATION
Allows for the safe removal and installation of the nose cowl without the need for an overhead crane.

HIGHLIGHTS

- Ready to ship AOG unit
- Lightweight design and construction
- Collapsible for easy storage
- Multiple aircraft applicability
- Corrosion and Skydrol® resistant finish
- Multi axis adjustable anti-marking retention pads
- Split wheel casters for easy movement
- 2 year limited warranty on components
- 10 year limited warranty on structure

TECHNICAL DATA

Height (low)	Custom
Height (high)	Custom
Width	84" / 213.3 cm
Length	107.75" / 273.6 cm
Unit Weight	150 lbs / 68 kg
Shipping Info (DIMS)	17.56" x 27.5" x 84.5"
Weight Capacity	Custom
Towing Speed	6 MPH / 10 KPH
Fall Restraint	Not Required
Fully Extended	N/A

Frame Material	Aluminum
Ladder Material	N/A
Padding Material	Anti-Marking Retention Pads
Caster Details	8" / 20.3 Split Caster with Brake and Swivel Lock
Finish	Powder Coated
Controls	N/A
Certifications	ANSI-ASC A14.7, BS EN 131.7, CE, DIN EN 12312-8 & EN 1915-1

AIRCRAFT APPLICATION

B737	X
B757	X
B767	X
A319	X
A320	X
A321	X
Custom	X

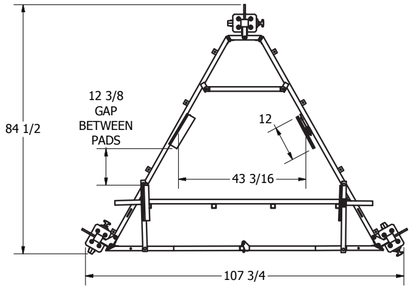

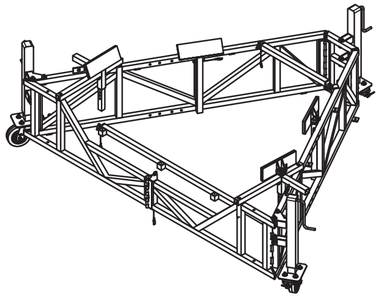

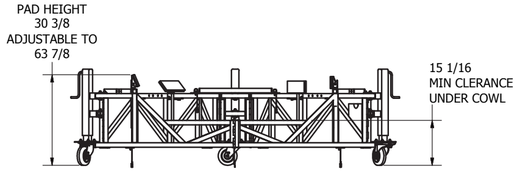

DOLLY IN OPERATIONAL MODE

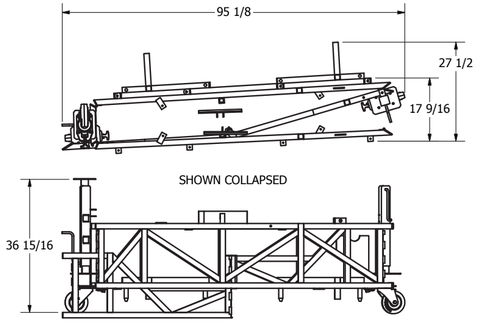

DOLLY DETAILS

DF081002

WHEEL & BRAKE SERVICE CART

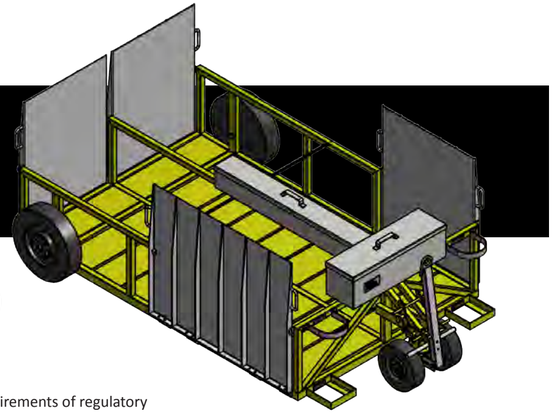

FOR TRANSPORTING WHEELS, BRAKES AND OTHER SERVICE EQUIPMENT
Safe and quick transportation of aircraft wheel assemblies, brakes and required tooling.

HIGHLIGHTS

- Low profile design
- Lightweight swing gate
- Safe transportation of aircraft wheel assemblies and tools
- Enclosed versions available
- Steel or aluminum construction
- Maintains the storage requirements of regulatory bodies (EASA, TC, FAA)
- 2 year limited warranty on components
- 10 year limited warranty on structure

TECHNICAL DATA

Deck Height	5.75" / 14.6 cm
Height (high)	Custom
Width	116" / 294.6 cm
Length	Custom
Unit Weight	Custom
Shipping Info (DIMS)	Custom
Weight Capacity	2,500 lbs / 1,134 kg
Towing Speed	31 MPH / 50 KPH
Fall Restraint	N/A
Fully Extended	N/A

Frame Material	Steel or Aluminum
Ramp Material	Steel or Aluminum
Padding Material	Contact Areas
Wheels	15" / 30.8 cm or 16" / 40.6 cm Based on Customer Requirments
Finish	Custom Colour
Movement	Pintle, Towed
Certifications	EASA, TC, FAA

OPTIONAL ACCESSORIES

Foam Filled Tires	X
Solid Tires	X
Brake Lifting Hoist	X
Nitrogen Holders	X
Surge Braking	X
Tool Boxes	
Tire Change Jack and Tool Configurations	X

AIRCRAFT APPLICATION

Custom	X

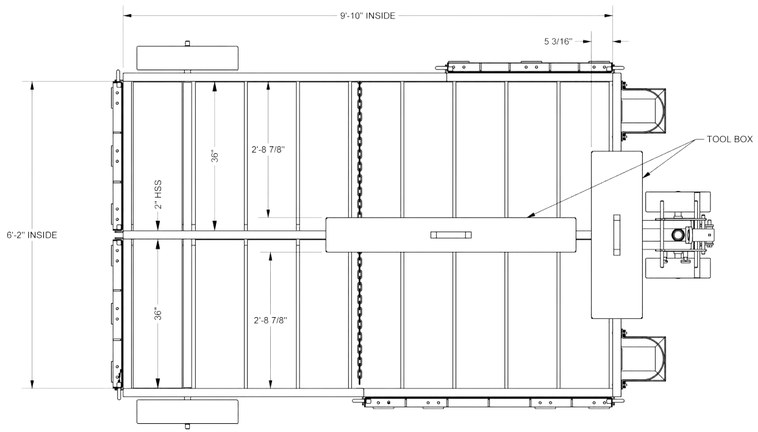

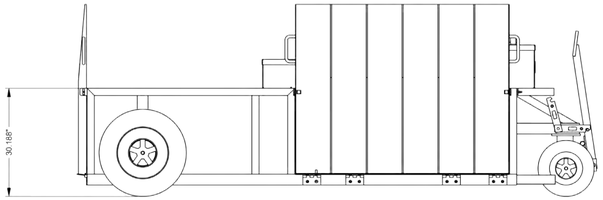

CART IN OPERATIONAL MODE

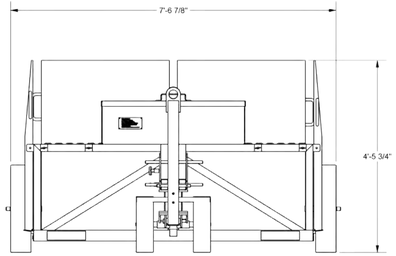

CART DETAILS

Move heavy loads easily with our innovative battery powered tuggers. Perfect for ensuring worker safety and increasing productivity when pushing or pulling heavy equipment. These products improve operator safety and are easy to use with no operating licence required. Each compact battery-powered motorized tugger combines superior traction and power to allow a single pedestrian operator to push, pull, and steer their loads with ease.

ELECTRIC TUGGERS

500 - 360,000 KG CAPACITY

FOR TRANSPORTING EQUIPMENT, AIRCRAFT AND STANDS

Allow a single user to handle large components, quickly but safely and with an all-round view of surrounding obstacles.

HIGHLIGHTS

- Increased speed of operation and efficiency
- Precision movement loads with total stop/start control
- Maximum manoeuvrability in confined spaces
- Reduces or eliminates the need for forklifts or cranes
- Can link together for larger loads

VARIABLE SPEED CONTROL

CUSTOM ATTACHMENT POINTS

SAFETY FEATURES BUILT INTO EACH UNIT

NO OPERATION LICENCE REQUIRED

UP TO 6,000 KG

Our small but powerful compact machines are capable of handling loads of up to 6,000 kg. From versatile and flexible SmartMovers to our MasterTugs and AT TOWs, we offer a range of solutions designed to meet your needs even in the most demanding of environments.

UP TO 30,000 KG

Our Performance range is designed to improve safety and efficiency when moving loads of up to 30,000 kg, allowing a single pedestrian user complete control and total manoeuvrability.

UP TO 360,000 KG

MasterMover's Performance Plus range of machines includes our PS3000+, our most powerful pedestrian electric tug to date. When linked together in a chain of 12 machines, the PS3000+ is capable of handling loads up to 360,000 kg.

ROOFGUARD

According to the Canada Labour Code — OHSR Part 1 S 2.5 (1) and Part 12 S 12.07 (1), when work is being performed at heights (above 3 metres), fall protection is required. Further expanding on fall protection requirements, it is encouraged that wherever possible, passive fall protection systems like RoofGuard are used in favour of active systems. Similar requirements are enforced worldwide.

ROOFGUARD

Passive fall protection for elevated surfaces and roof edges.

HATCHGUARD

Protection for roof openings and hatches.

SKYLIGHT GUARDRAIL

Protection for skylight openings.

LADDERGUARD

Protection for egress while entering and exiting a ladder.

ROOFSTEP XS

Ladder and platform combination for safe and easy movement over obstructions.

MEZZANINE GUARDRAILS

Mezzanine guardrail systems allow workers to access elevated areas within your facility or create more space inside your facility while still meeting the working at heights requirements set out by your respective regulatory body (OHSA, OSHA, etc).

Custom configurations available based on your requirements.

ROOFSTEP LD (LADDER SERIES)

Ladder Series (LD) RoofStep systems help workers move from one level to another, and have guardrails on the upper side to help prevent a fall to the lower level. Each system is self supported with 45° braces and RoofGuard's non-penetrating, nested baseplates.

ROOFWALK

Non-slip walkways for rooftops and elevated surfaces. Each system can be integrated easily with RoofGuard systems.

Custom configurations available based on your requirements.

WARRANTY INFORMATION

Liftsafe Group of Companies warrants all fabricated and supplied equipment, to be free from defects in material and workmanship for a period of two (2) years commencing on the date of shipment to the first retail purchaser ("Purchaser"). This warranty does not extend to equipment which has been subject to misuse, use in excess of rated capacity, negligent operation, use beyond Liftsafe Group of Companies published service factors, improper installation or maintenance, and does not apply to any equipment which has been repaired or altered without Liftsafe Group of Companies written authorization. Written notice of any claimed defect must be given to Liftsafe Group of Companies within thirty (30) days after such defect is discovered. Liftsafe Group of Companies obligation, and Purchaser's sole remedy under this Warranty is limited to, at Liftsafe Group of Companies discretion, the replacement or repair of the equipment at Liftsafe Group of Companies factory or at a location approved by Liftsafe Group of Companies. Purchaser is responsible for all freight and transportation costs relating to the repair or replacement of the equipment.

THE FOREGOING WARRANTY IS EXPRESSLY IN LIEU OF ALL OTHER WARRANTIES WHATSOEVER WHETHER EXPRESS, IMPLIED, OR STATUTORY. SELLER MAKES NO WARRANTY AS TO THE MERCHANTABILITY OR FITNESS FOR A PARTICULAR PURPOSE OF THE EQUIPMENT AND MAKES NO OTHER WARRANTY, EITHER EXPRESS OR IMPLIED.

Liftsafe Group of Companies shall not be liable, under any circumstances, for any indirect, special or consequential damages including, but not limited to, lost profits, increased operating costs or loss of production. This Warranty shall not extend to any components or accessories not manufactured by Liftsafe Group of Companies.

DESIGNED TO MEET THESE STANDARDS

ANSI
ANSI A14.3,
ANSI A14.7,
ANSI Z359.1-2007,
ANSI Z359.3-2007 &
ANSI-ASC 14.2-2017

OSHA
1910.23,
1910.25,
1910.28,
1910.29,
1926.1051,
1926.1052 &
1926.1053

PRODUCTS DESIGNED IN INVENTOR

cwbcertification
CSA W47.1

ALL LIFTSAFE FALL PROTECTION DF SERIES STANDS HAVE A 2 YEAR BUMPER TO BUMPER WARRANTY.

Warranty includes casters, paint, slide-out extensions, tow bars, jacks, tool boxes and trays, equipment defects and structural components.

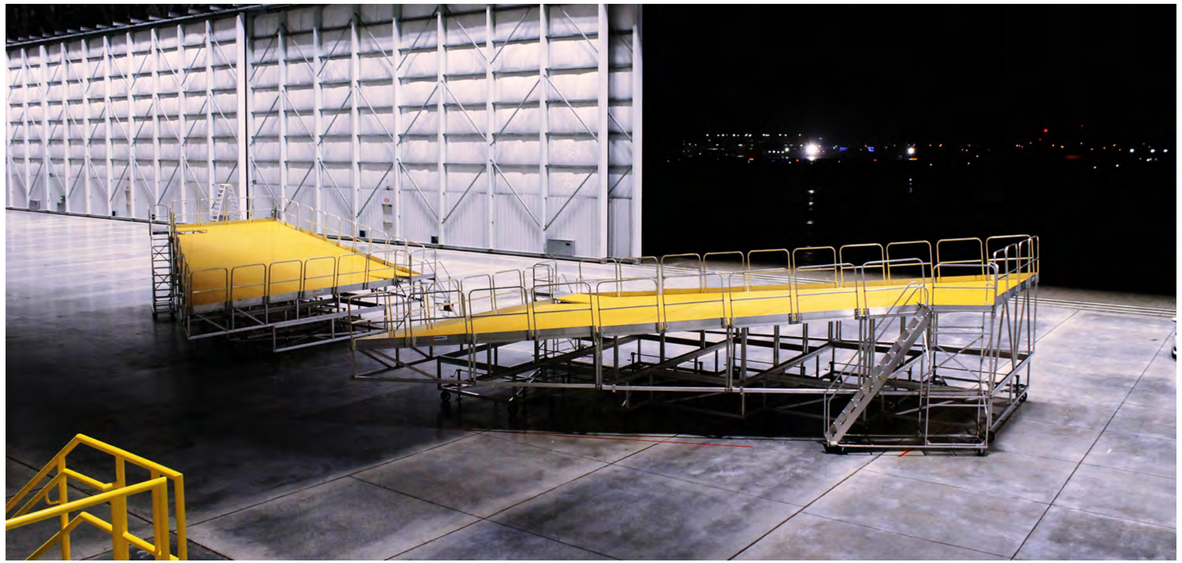

1574 Eagle St N., Unit C101
Cambridge, ON N3H 4S5

info@liftsafegroup.com
www.liftsafefallprotection.com
+1-800-977-2005