FACTORY SUPPLY.COM

FSH-1510
ACCESS STAND

FOR ENGINE, ROTOR & TAIL ACCESS
Aircraft technicians use these stands for routine inspection, maintenance, and repair of helicopter components.

HIGHLIGHTS
- Safety step lock
- Heavy duty steel construction
- Durable powder coat finish
- Removable hand rails

HELI GRADE SOLUTIONS

TECHNICAL DATA

Height	124"	Rail Material	Steel
Width	68"	Padding Material	Contact Areas
Length	38"	Caster Size	5"
Unit Weight	320 lbs	Platform Material	Diamond Plate / Fiberplate Composite
Shipping Info (DIMS)	100" x 41" x 70" x 310 lbs	Finish	Powder Coat
Deck Height	80"	Certifications	OSHA 1926.1053; ANSI-ASC 14.2-2017
Vertical Clearance	122"		
Platform Dimensions	36" x 17"		
Load Capacity	350 lbs		
Deck Capacity	350 lbs		
Stair Capacity	250 lbs		
Step Width	36"		
Frame Material	Steel		

OPTIONAL ACCESSORIES

Diamond Plate Decking	X
Grip-Strut Tread	X
Tool Trays	X

HELICOPTER APPLICATION

Sikorsky UH-60	X
Sikorsky MH-60	X
Sikorsky SH-60	X
Sikorsky S-72	X
Sikorsky S-92	X

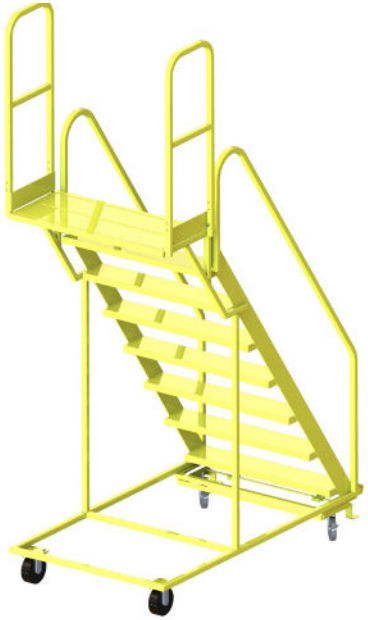

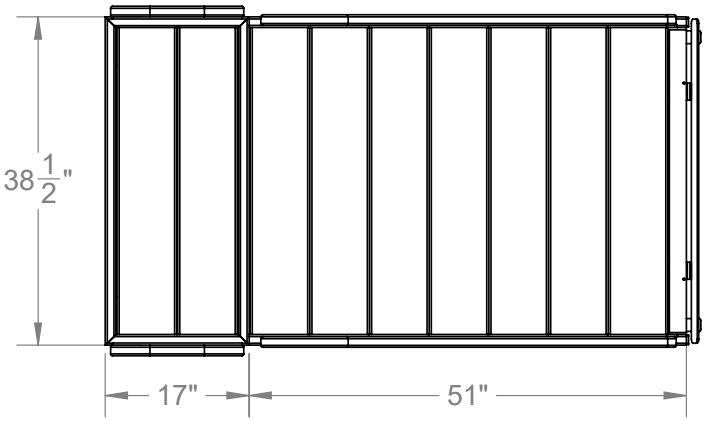
38 1/2"
17"
51"

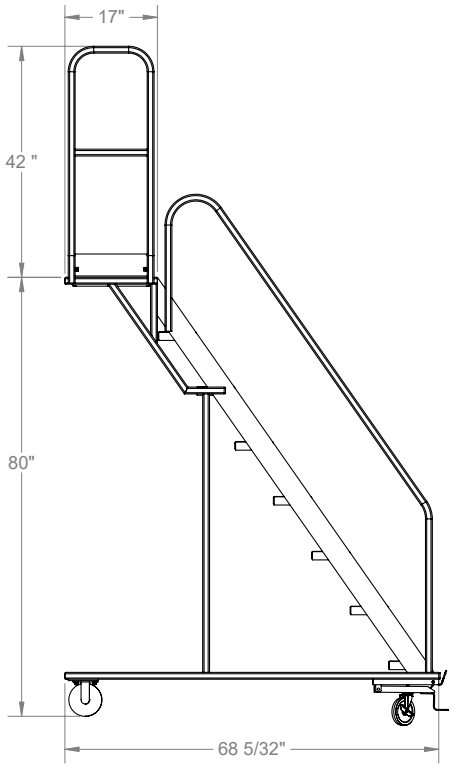
17"
42 "
80"
68 5/32"

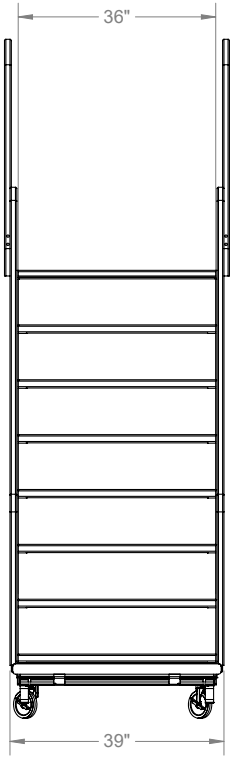
36"
39"