FACTORY SUPPLY.COM

FSH-1530
ACCESS STAND

FOR ENGINE, ROTOR & TAIL ACCESS
Aircraft technicians use these stands for routine inspection, maintenance, and repair of helicopter components.

HIGHLIGHTS
- Heavy duty steel construction
- Multi-person access
- Durable powder coat finish
- Floor lock brakes
- Heavy duty casters

HELL GRADE SOLUTIONS

TECHNICAL DATA

Height	80"	Rail Material	Steel
Width	75"	Padding Material	Contact Areas
Length	72"	Caster Size	8"
Unit Weight	475 lbs	Platform Material	Diamond Plate / Fiberplate Composite
Shipping Info (DIMS)	80" x 72" x 75" x 475 lbs	Finish	Powder Coat
Deck Height	52"	Certifications	OSHA 1926.1053; ANSI-ASC 14.2-2017
Vertical Clearance	80"		
Platform Dimensions	72" x 36"		
Load Capacity	500 lbs		
Deck Capacity	500 lbs		
Stair Capacity	250 lbs		
Step Width	36"		
Frame Material	Steel		

OPTIONAL ACCESSORIES

Composite Plate Decking	X
Diamond Plate Decking	X
Tool Trays	X

HELICOPTER APPLICATION

Bell 204 / 205	X
Bell 206	X
Bell 407	X
Bell 427	X
Bell 429	X
Eurocopter / Airbus EC135	X
Eurocopter / Airbus H135	X
Eurocopter / Airbus EC145	X
Eurocopter / Airbus H145	X

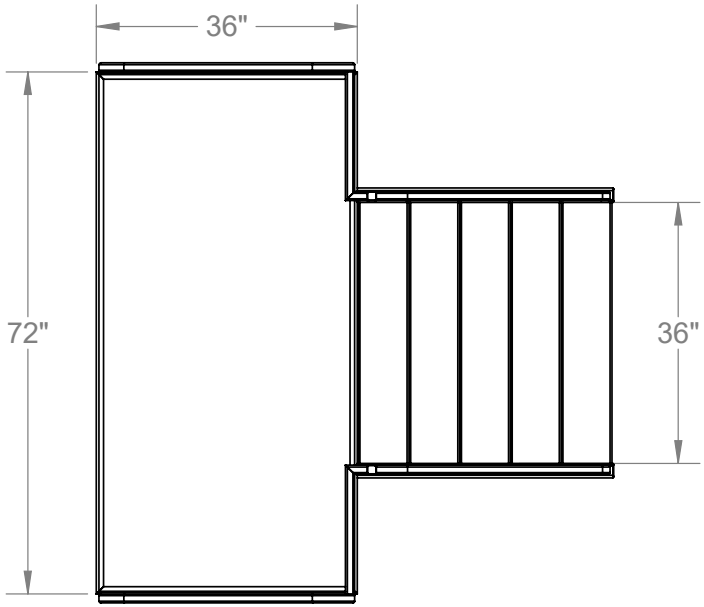
36"
72"
36"

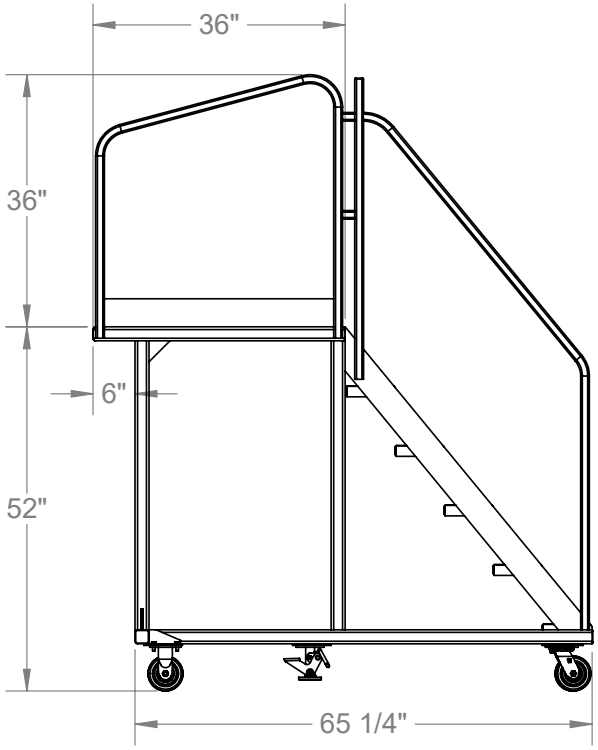
36"
36"
6"
52"
65 1/4"

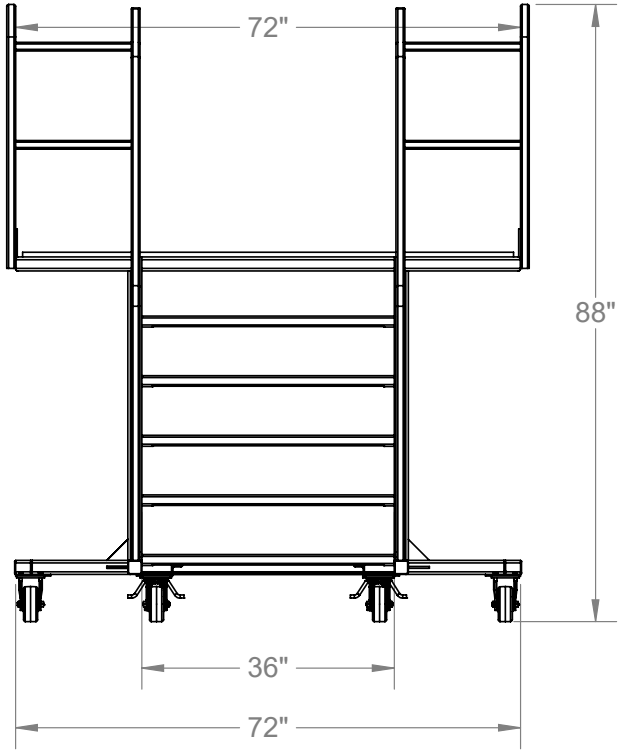
72"
88"
36"
72"