FACTORY SUPPLY.COM

FSH-1000
ACCESS STAND

FOR FUSELAGE, ENGINE & ROTOR ACCESS
Aircraft technicians use these stands for routine inspection, maintenance, and repair of helicopter components.

HIGHLIGHTS
- Folding upper access platform
- Removable hand rails
- Light-weight aluminum construction
- Exceptional maneuverability
- Self-supported cantilever design fits around / over landing skids

HELI GRADE SOLUTIONS

TECHNICAL DATA

Height	117"	Step Width	22"
Width	54"	Frame Material	Aluminum
Length	100"	Rail Material	Aluminum
Unit Weight	550 lbs	Padding Material	Contact Areas
Shipping Info (DIMS)	100" x 52" x 85" x 550 lbs	Caster Size	8”
		Platform Material	Diamond Plate / Fiberplate Composite
Upper Deck Height	81"		
Lower Deck Height	41"	Finish	Mill / Powder Coat Handrails
Vertical Clearance	117"		
Platform Dimensions	96" x 24"; 48" x 24"	Certifications	OSHA 1926.1053; ANSI-ASC 14.2-2017
Load Capacity	500 lbs		
Deck Capacity	500 lbs Lower / 300 lbs Folding Platform		
Stair Capacity	250 lbs		

OPTIONAL ACCESSORIES

Composite Plate Decking	X
Diamond Plate Decking	X
Tool Trays	X

HELICOPTER APPLICATION

Bell 206	X
Bell 407	X
Bell 427	X
Bell 429	X
Eurocopter / Airbus EC135	X
Eurocopter / Airbus H135	X
Eurocopter / Airbus EC145	X
Eurocopter / Airbus H145	X

UPPER ACCESS PLATFORM IN EXTENDED POSITION
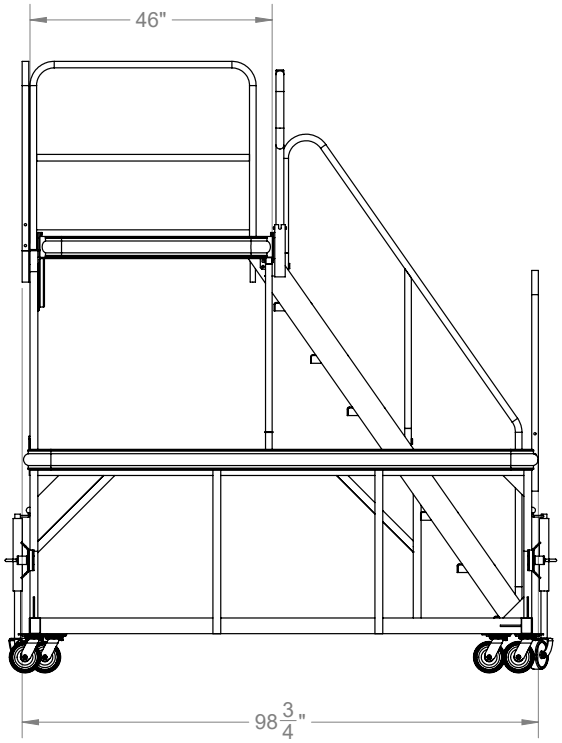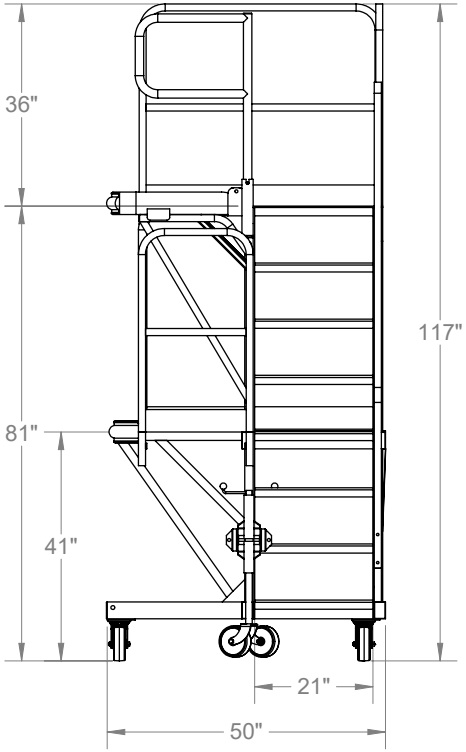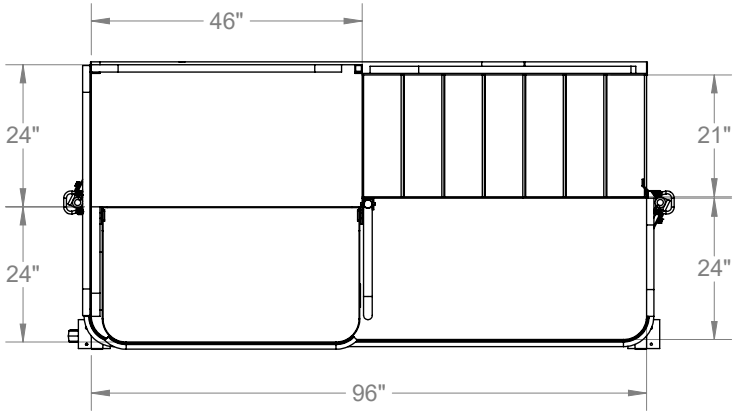
UPPER ACCESS PLATFORM IN FOLDED POSITION